REV	CHANGE DESCRIPTION	ECN	DATE	REVISED BY	APPROVED BY

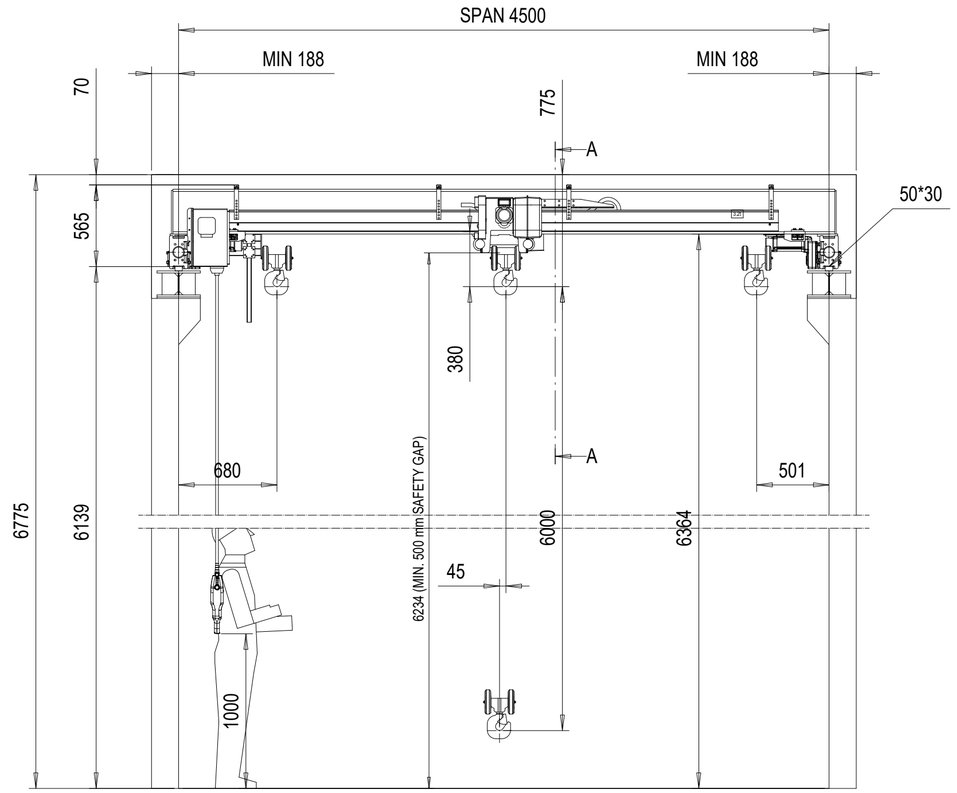

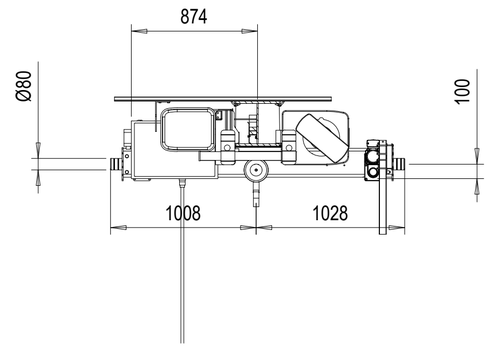

VIEW A-A

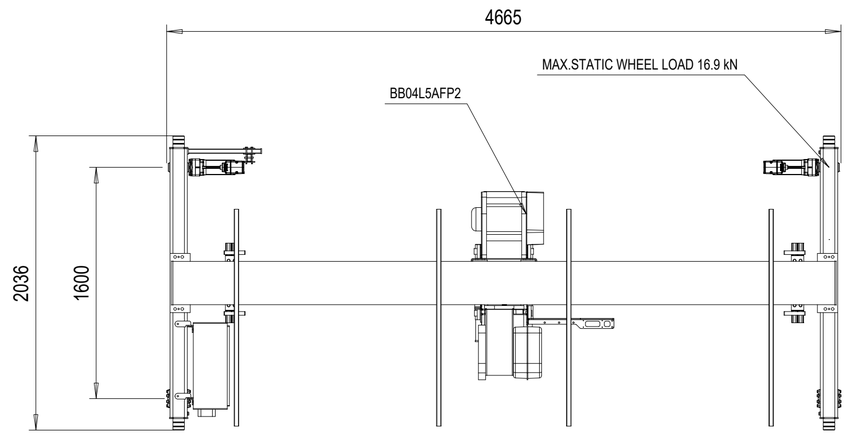

TECHNICAL DATA

SPAN	: 4.5 m
LOAD	: 3.2t
LIFTING HEIGHT	: 6 m
HOISTING SPEED	: 5/0.83 m/min 2-speed
TRAVERSING SPEED	: 20/5 m/min 2-speed pole change
TRAVELLING SPEED	: 40/10 m/min 2-speed inverter
WEIGHT OF TROLLEY	: 220 kg
WEIGHT OF BRIDGE	: 800 kg
CRANE GROUP	: H2B3
HOIST GROUP	: ISO M5
CRANE DRIVE GROUP	: M5
MAIN / CONTROL VOLTAGE	: 380 / 48 V; 50 Hz
SUPPLY POWER	: 4.5 kW
LENGTH OF RUNWAY	: 0 m

SURFACE TREATMENT OF CRANE

BRIDGE COLOR	: Gelb
PAINT	: AKRYL /70 µm

Runway tolerances must comply with standard ISO12488-1 TOLERANCE CLASS 2

CUSTOMER ORGANIZES SAFE PLATFORM FOR CRANE SERVICE

Indoor Use crane 5°....40° C
Radio controlled crane
Pendant as backup

ACCEPTED BY:

COMPANY:

DATE:

Pos	Amount	Description	Specification

DMA/SCG Design	Chd	Appd	Ref drawing	DAS / 2.98.18 Vx proj
20.03.2019 Date	BSC3.2t x 4.5m Hol:6m			1:30
Schwäbisch Hall Dept				M-film
	2-20.5-6-O			Issue

Twin copy

SWF KRANTECHNIK

2-20.5-6-O

SWF Krantechnik reserves the right to alter or amend the above information without notice.
This document and the information contained herein is the exclusive property SWF Krantechnik and represents a non-public, confidential and proprietary trade secret that may not be reproduced, disclosed to third parties, altered or otherwise employed in any manner whatsoever without the express written consent of SWF Krantechnik GmbH. Copyright © SWF Krantechnik. All rights reserved.

2-20.5-6-O-I

REV	CHANGE DESCRIPTION	ECN	DATE	REVISED BY	APPROVED BY

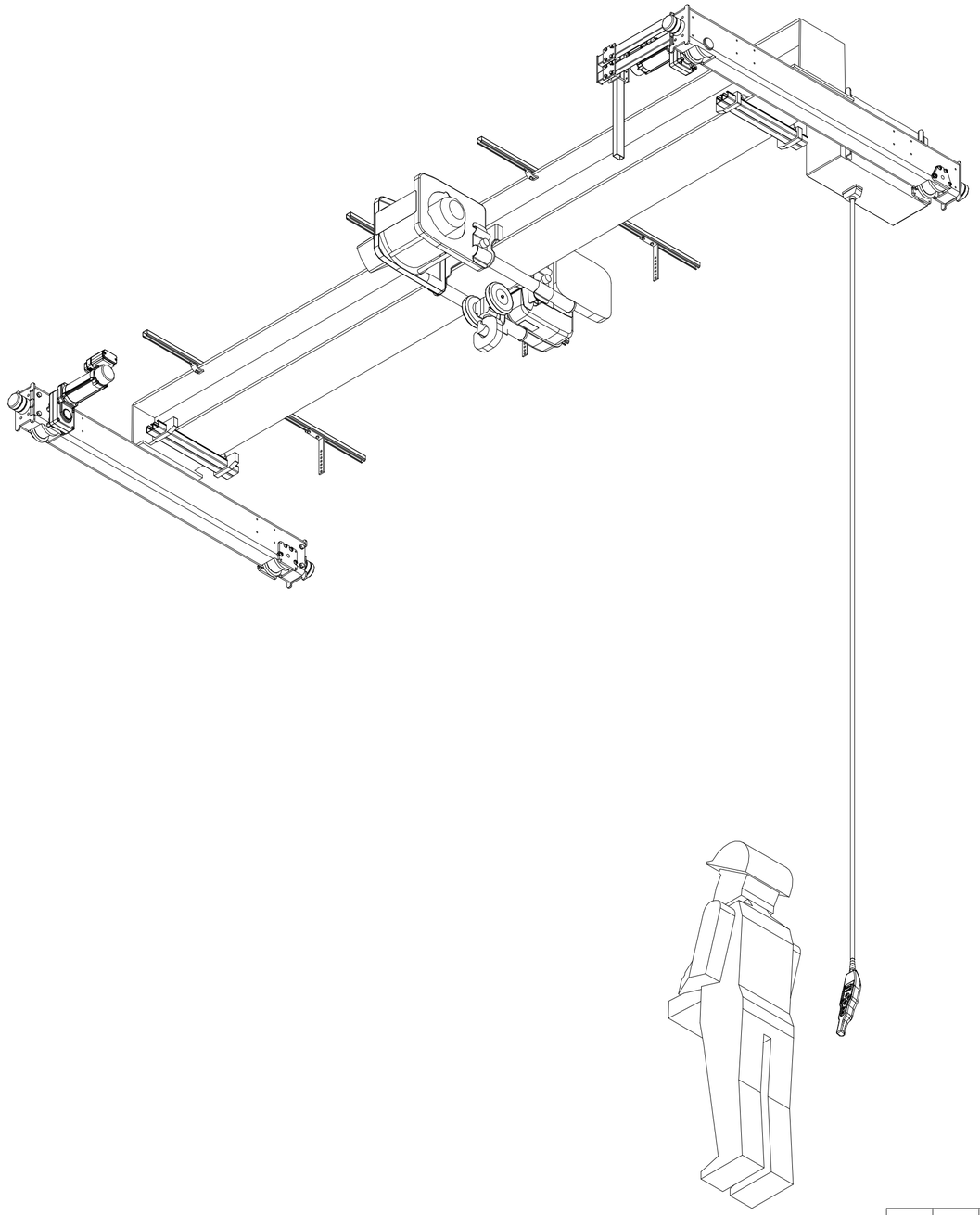

Pos	Amount	Description	Specification

DMA/SCG Design	Chd	Appd	Ref drawing	DAS / 2.98.18 Vx proj
20.03.2019 Date	BSC3.2t x 4.5m Hol:6m			1 : 40
Schwäbisch Hall Dept				M-film
SWF KRANTECHNIK	2-20.5-6-O-I			Issue

Twin copy

SWF Krantechnik reserves the right to alter or amend the above information without notice.
This document and the information contained herein, is the exclusive property SWF Krantechnik and represents a non-public, confidential and proprietary trade secret that may not be reproduced, disclosed to third parties, altered or otherwise employed in any manner whatsoever without the express written consent of SWF Krantechnik GmbH. Copyright © SWF Krantechnik. All rights reserved.